220928 September 28, 2022 11:57 AM

ORMESA®

• MADE IN ITALY SINCE 1980 •

Juditta

Juditta

An evolution in comfort.

Juditta is a tilting and reclining wheelchair specially designed and built by Ormesa **for adult and elderly patients** who need an extended or permanent stay in a wheelchair or in bed.

It is a **sitting system recommended for individuals with different levels of disability**; it even adapts to the most complex cases. It allows to assume a stable and comfortable position and to prevent incorrect or pathologic attitudes.

The **seat's viscoelastic cords** adapt to each **individual user's anatomy** and prevent rubbing and pressure sores.

Its **particular structure allows breathability, hygiene and comfort.**

CRASH TESTED

Model B30 and B60 are suitable to be transported in a vehicle according to **ISO 7176/19** and **ANSI RESNA WC/19** standards.

PRODUCT MARKED CE

JUDITTA is a MEDICAL DEVICE that COMPLIES WITH THE SAFETY REQUIREMENTS defined with the REGULATION (EU) 2017/745

Hygenic and breathable

Special coating material

Anti-bacterial headrest

made of a special material with closed cells highly resistant to external chemical agents.

Long-lasting visco-elastic material

the seat and backrest are covered with viscoelastic fire-proof material. It is resistant, breathable and anti-slip. It is made of a **special and exclusive Ormesa formula.**

Main: (587) 323-0022 Toll Free: 1 844-323-0022
sales@westechhealth.com
www.westechhealth.com

WESTECH
HEALTH CARE LTD.

Ergonomic sitting

Supports and holds shapes

Ergonomic backrest

it holds the shapes of the user. The special structure of the backrest gives a proper alignment to the trunk and **it doesn't generate any pressure on the spine.**

It also offers a high level of stability without the need of side supports. It holds deformities and prevents retractions.

It relieves and redistributes the pressure and increases the sitting position tolerance

Backrest adjustable in height to adapt to the different dimensions of users.

Seat

The **special cover of the seat** and the slight tilt prevent the user from sliding forward.

The leg and backrest mechanical joints are close to the physiological ones. When you change the tilt of the leg rest and backrest, otherwise unavoidable slips are not created.

Multiadjustable headrest

The structure and dimensions of the headrest provide stability to the user without obstructing the lateral movement of the head. **The headrest follows the shape of the backrest; thus assuring the proper alignment between head and trunk.** The high excursion in depth and the wide lateral translation of the headrest satisfy the user's specific needs and allow following his head in a decentralized position compared to the alignment of trunk and pelvis. **All the adjustments facilitate and sustain the visual orientation of the subject.**

Adjustable in height.

Adjustable in tilt.

Adjustable in depth.

Adjustable in lateral translation.

Main: (587) 323-0022
Toll Free: 1 844-323-0022
sales@westechhealth.com
www.westechhealth.com

Confortable

Distributed pressure discharge

The tilt and recline positively affect blood pressure by improving oxygenation in the skin and muscle tissues.

Without a seated person.

With a seated person.

Weight is well distributed between the seat and backrest, **excluding pressure peaks on the ischial area.**

The **viscoelastic material** of the seat and backrest **follows the anatomy of the user** adapting to it **without generating any pressure and/or rubbing.**

Juditta sitting shape and cover **avoid pressures along the spine.**

Tilt in space and reclining

Tilting and reclining of the backrest make it possible to get the **ideal support position.**

This allows a **variation of the pressure points and prevents from generating pressure sores.**

Tilting and recline are operated by two independent gas springs that absorb the user's weight and make it easy to be handled by the caregiver, favoring the change of postural settings several time in a day.

WESTECH HEALTH CARE LTD.

Main: (587) 323-0022 Toll Free: 1 844-323-0022
sales@westechhealth.com
www.westechhealth.com

Clinical observation

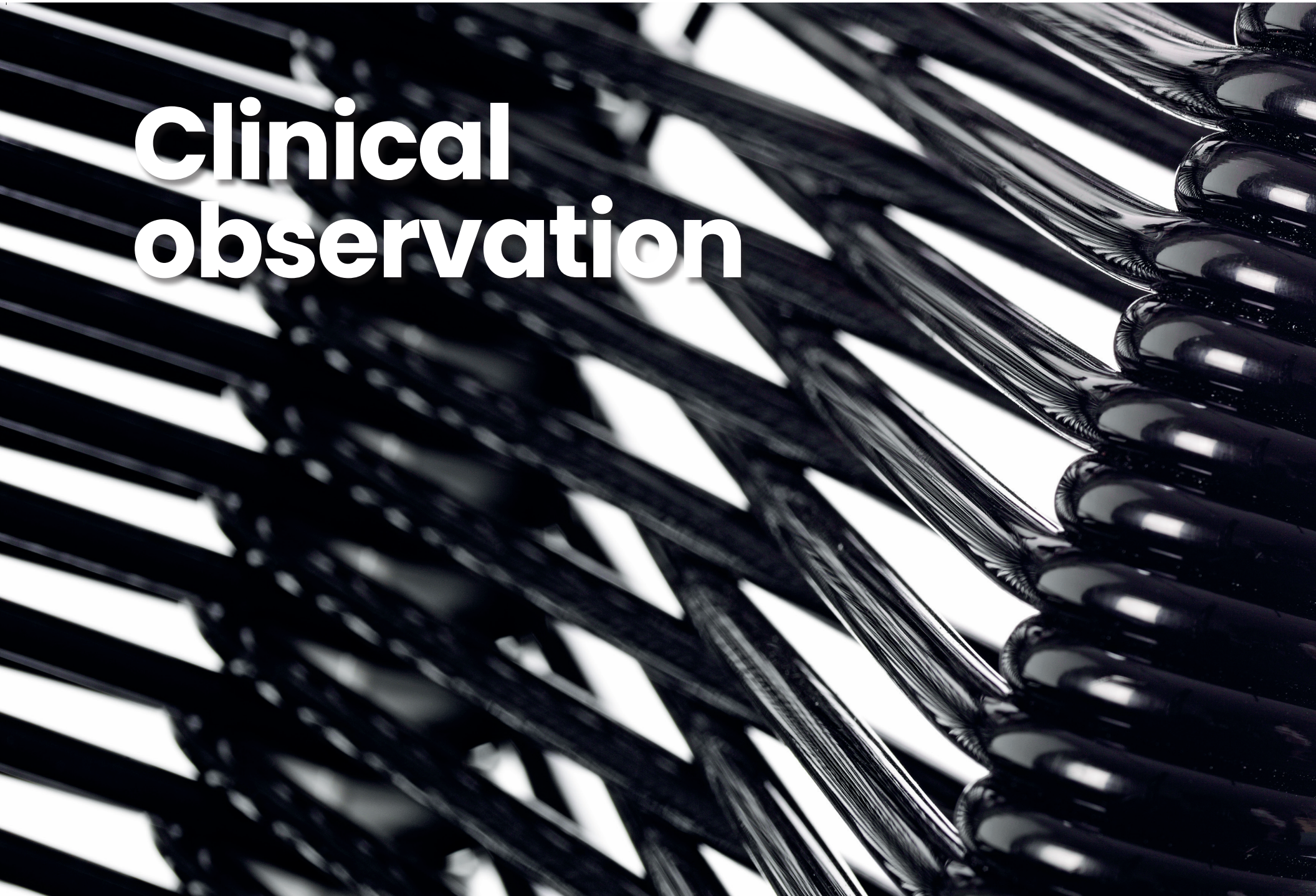

Clinical observations carried out on Juditta show an optimal redistribution of the body weight. It entails the reduction of pressure peaks and prevents from the risk of generating pressure sores.

INTERNATIONAL SEATING SYMPOSIUM

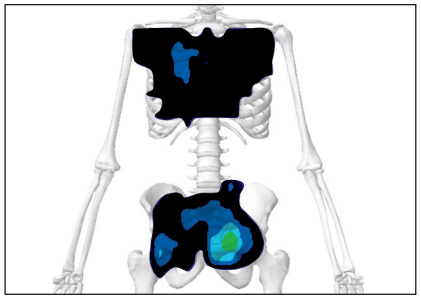

Juditta, our seating concept for those patients who need to maintain the lying position for a long time

The special viscoelastic cords adapt themselves to the shapes and weight of the user, it increases backrest and seat contact area and generate a considerable reduction of the pressure peaks.

Juditta: max. tilting, max. backrest recline, lifted footrests.
Patient (average adult) just positioned.

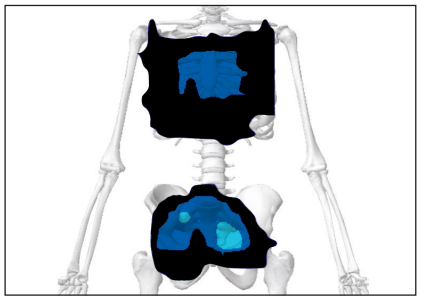

Extended pressure discharge

Even after one hour and 30 minutes from positioning the user the special viscoelastic cords continue to maintain their shaping feature and the pressure loading decreases.

Juditta: max tilting, max backrest recline, lifted footrests.
Patient (average adult) positioned by 90 minutes.

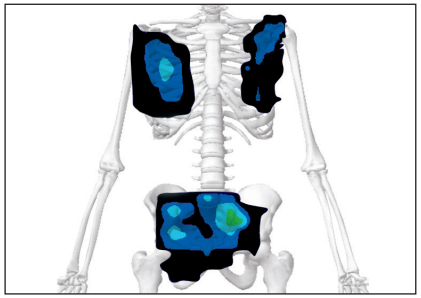

No pressure loading on the vertebral bodies

On the left we see a safety situation for the user with limited pressure discharge. When removing the upholstery there are no pressures along the spinal tract. This makes Juditta particularly suitable for people suffering from inflammation and skin changes in the area of the spine.

Juditta: results without upholstery.

Customizable

Adaptable to the different user needs

Legrest

ergonomic, removable, turnable and adjustable in tilt without effort, activated with gas springs.

Calf rests adjustable in depth and free tilt to accommodate the movements of the leg.

Footrests

adjustable in flexion-extension and height.

Seat adjustable in depth

on four positions, maintaining the same recline degrees of the backrest on the 4 levels of depth.

Main: (587) 323-0022 | Toll Free: 1 844-323-0022
sales@westechhealth.com
www.westechhealth.com

Drum brakes

single control drum **red** and additional **black** pedal for overcoming steps.

Armrests

padded and easily and stably adjustable in height thanks to the lever.

Sides with scissor opening

thanks to the special joint, the armrests are positioned behind the backrest, eliminating completely all obstacles to the transfer.

Backrest

folding for transportation.

Backrest, adjustable in tilt

by levers with safety pin. The pin allows blocking the levers to maintain the proper adjustment for the user.

Push handle

adjustable in tilt/height. It helps the care-giver in handling it even when Juditta is in the lying down position.

Main: (587) 323-0022 | Toll Free: 1 844-323-0022
sales@westechhealth.com
www.westechhealth.com

Breathable, durable

Made of high quality Italian fabric

light grey

available even with **white frame**

dark grey

available even with **black frame**

long lasting upholstery

Easy to remove for washing

- **Fire-proof:** its fire-proof properties are inherent to the yarn and they do not come from any additional treatments.
- **Recyclable:** production cycle with low environmental impact.
- **Martindale method:** maximum resistance to rubbing: 100.000 cycles. UNI ENI ISO 12947.
- **Oeko-Tex Certificate:** for all fabrics that are in direct contact with the skin, to guarantee quality and safety for health.
- **Long-lasting and highly resistant colours:** they are resistant to sweat, light, dry cleaning and washing machine (see its Use and Instruction manual).

FIDUCIA NEL TESSILE
Testato per sostanze nocive
secondo Oeko-Tex® Standard 100
00000000 Institut

TESSUTO RICICLABILE
RECYCLABLE FABRIC

CERTIFICATE
MED annex A. 1/3. 19-20-21

WESTECH HEALTH CARE LTD.
Main: (587) 323-0022 | Toll Free: 1 844-323-0022
sales@westechhealth.com
www.westechhealth.com

Three tilting models

for the different environments

B12

for indoor use, with four 5 inches solid swivelling wheels, brakes on rear wheels.

891 tie down hooks (4 rings) AS STANDARD

B30

with 8 inches front solid swivelling wheels and 12 inches rear wheels; drum brakes operated by a single control pedal and pedal to climb steps.

891 tie down hooks (4 rings) AS STANDARD

B60

with 8 inches front solid wheels and 22 inches rear wheels with brake. Anti-tip device and pedal to climb steps.

On request available set of hand brakes with single lever, for rear wheels (MOD 905).

ATTENZIONE
Juditta
C302|01

Components

824-R Reclinable tray
Adjustable in tilt, backwards-forwards, with security block.

It is made by resistant and hygienic material, design with no edges, it doesn't keep residual food.

894 45º Pelvic belt

834 Padded abduction block
Adjustable in height and backwards-forwards.

892 Footplate covering
Padded and removable.

896 Tray 824 covering
Padded and removable.

905 Set of hand brakes with single lever
for rear wheels, only for B30 and B60.

Components

914 Footrest lock
Locks the two footrests together to form one unit.

916 Padded leg panel
Alternative to the calf rests.

932 Anti-tip device
Only for B30 (as standard on B60).

933 IV Pole
Only for B30 and B12.

936 Headrest cover
removable. In combination with the upholstery.

938 Water-proof cover

Main: (587) 323-0022 | Toll Free: 1 844-323-0022
sales@westechhealth.com
www.westechhealth.com

Juditta B12 sizes and weight

	size 36	size 40	size 45	size 50
A: seat bottom width	36 cm ~ *14,1 in*	40 cm ~ *15,7 in*	45 cm ~ *17,7 in*	50 cm ~ *19,6 in*
B: seat bottom depth	40-43-46-49 cm *15,7-16,9-18,1-19,2 in*	40-43-46-49 cm *15,7-16,9-18,1-19,2 in*	40-43-46-49 cm *15,7-16,9-18,1-19,2 in*	40-43-46-49 cm *15,7-16,9-18,1-19,2 in*
C: backrest width	47 cm ~ *18,5 in*	47 cm ~ *18,5 in*	52 cm ~ *20,4 in*	57 cm ~ *22,4 in*
D: overall width	60 cm ~ *23,6 in*	60 cm ~ *23,6 in*	65 cm ~ *25,5 in*	70 cm ~ *27,5 in*
H: seat bottom inclination-tilt	from 10° to 35°	from 10° to 35°	from 10° to 35°	from 10° to 35°
I: backrest inclination	from 10° to 38°	from 10° to 38°	from 10° to 38°	from 10° to 38°
Total weight	37 kg ~ *81,5 lb*	37 kg ~ *81,5 lb*	39 kg ~ *85,9 lb*	40 kg ~ *88,1 lb*
Max capacity	120 kg ~ *264,5 lb*	120 kg ~ *264,5 lb*	130 kg ~ *286,6 lb*	140 kg ~ *308,6 lb*
User height	from 140 to 190 cm *from 55,1 to 74,8 in*	from 140 to 190 cm *from 55,1 to 74,8 in*	from 140 to 190 cm *from 55,1 to 74,8 in*	from 140 to 190 cm *from 55,1 to 74,8 in*

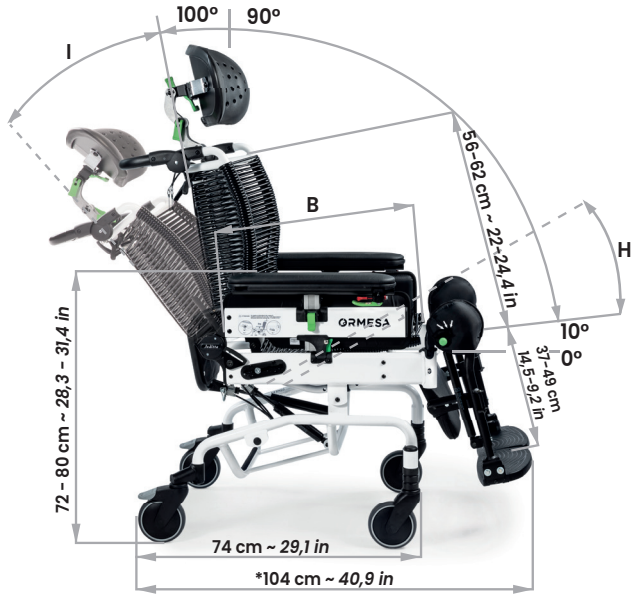

*footrest adjusted to the maximum length

Juditta B30 sizes and weight

	size 36	size 40	size 45	size 50
A: seat bottom width	36 cm ~ *14,1 in*	40 cm ~ *15,7 in*	45 cm ~ *17,7 in*	50 cm ~ *19,6 in*
B: seat bottom depth	40-43-46-49 cm *15,7-16,9-18,1-19,2 in*	40-43-46-49 cm *15,7-16,9-18,1-19,2 in*	40-43-46-49 cm *15,7-16,9-18,1-19,2 in*	40-43-46-49 cm *15,7-16,9-18,1-19,2 in*
C: backrest width	47 cm ~ *18,5 in*	47 cm ~ *18,5 in*	52 cm ~ *20,4 in*	57 cm ~ *22,4 in*
D: overall width	62 cm ~ *24,4 in*	62 cm ~ *24,4 in*	67 cm ~ *26,3 in*	72 cm ~ *28,3 in*
H: seat bottom inclination-tilt	from 10° to 35°	from 10° to 35°	from 10° to 35°	from 10° to 35°
I: backrest inclination	from 10° to 38°	from 10° to 38°	da 10° to 38°	from 10° to 38°
Total weight	38 kg ~ *83,7 lb*	38 kg ~ *83,7 lb*	41 kg ~ *90,3 lb*	42 kg ~ *92,5 lb*
Max capacity	120 kg ~ *264,5 lb*	120 kg ~ *264,5 lb*	130 kg ~ *286,6 lb*	140 kg ~ *308,6 lb*
User height	from 140 to 190 cm *from 55,1 to 74,8 in*	from 140 to 190 cm *from 55,1 to 74,8 in*	from 140 to 190 cm *from 55,1 to 74,8 in*	from 140 to 190 cm *from 55,1 to 74,8 in*

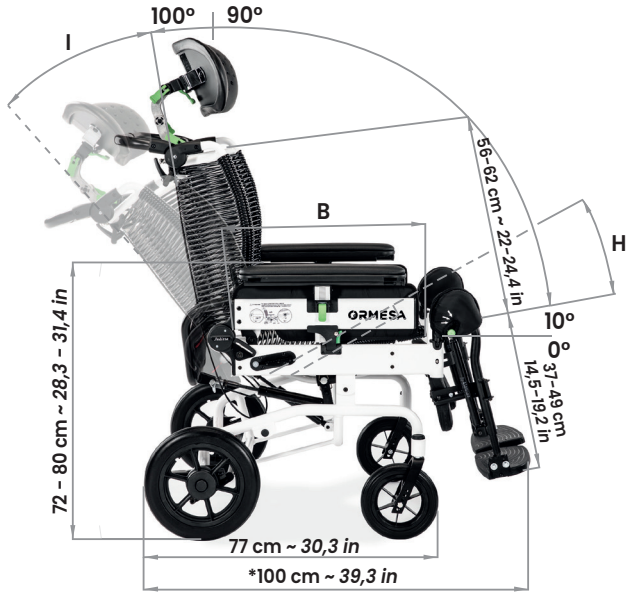

*footrest adjusted to the maximum length

WESTECH HEALTH CARE LTD.

Main: (587) 323-0022 | Toll Free: 1 844-323-0022
sales@westechhealth.com
www.westechhealth.com

Juditta B60 sizes and weight

	size 36	size 40	size 45	size 50
A: seat bottom width	36 cm ~ *14,1 in*	40 cm ~ *15,7 in*	45 cm ~ *17,7 in*	50 cm ~ *19,6 in*
B: seat bottom depth	40-43-46-49 cm *15,7-16,9-18,1-19,2 in*	40-43-46-49 cm *15,7-16,9-18,1-19,2 in*	40-43-46-49 cm *15,7-16,9-18,1-19,2 in*	40-43-46-49 cm *15,7-16,9-18,1-19,2 in*
C: backrest width	47 cm ~ *18,5 in*	47 cm ~ *18,5 in*	52 cm ~ *20,4 in*	57 cm ~ *22,4 in*
D: overall width	69 cm ~ *27,1 in*	69 cm ~ *27,1 in*	74 cm ~ *29,1 in*	79 cm ~ *31,1 in*
H: seat bottom inclination-tilt	from 10° to 35°	from 10° to 35°	from 10° to 35°	from 10° to 35°
I: backrest inclination	from 10° to 38°	from 10° to 38°	from 10° to 38°	from 10° to 38°
Total weight	40 kg ~ *88,1 lb*	40 kg ~ *88,1 lb*	42 kg ~ *92,5 lb*	43 kg ~ *94,7 lb*
Max capacity	120 kg ~ *264,5 lb*	120 kg ~ *264,5 lb*	130 kg ~ *286,6 lb*	140 kg ~ *308,6 lb*
User height	from 140 to 190 cm *from 55,1 to 74,8 lb*	from 140 to 190 cm *from 55,1 to 74,8 lb*	from 140 to 190 cm *from 55,1 to 74,8 lb*	from 140 to 190 cm *from 55,1 to 74,8 lb*

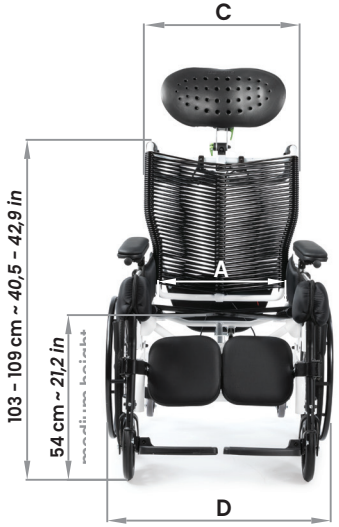

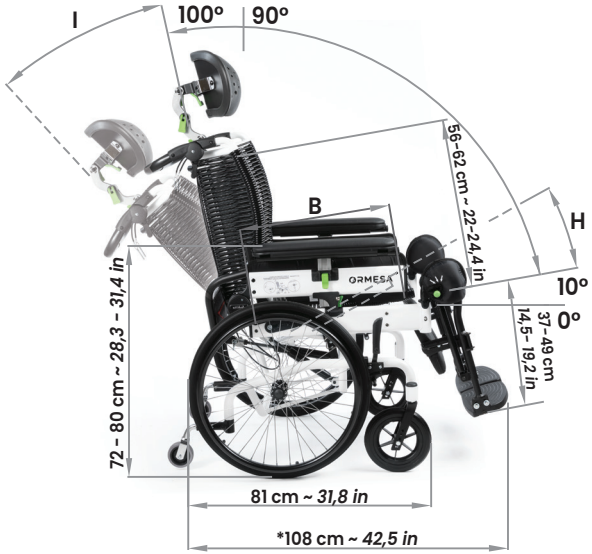

*footrest adjusted to the maximum length

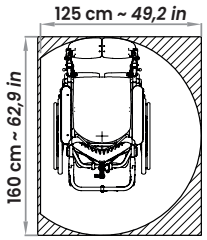

180° rotation

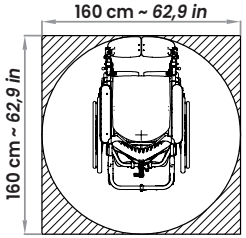

360° rotation

WESTECH
HEALTH CARE LTD.

Integrity | Trust | Honesty | Knowledge | Respect

Westech Health Care Ltd.

154 - 5255 McCall Way NE, Calgary, Alberta T2E 7J5
Main: (587) 323-0022 Toll Free: 1 844-323-0022
sales@westechhealth.com
www.westechhealth.com

"Our goal is to help Canadians of all ages live independently with dignity and respect by offering innovative health care products."